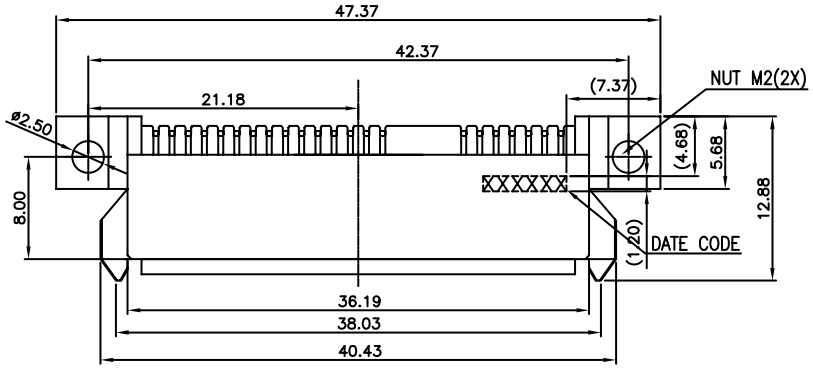


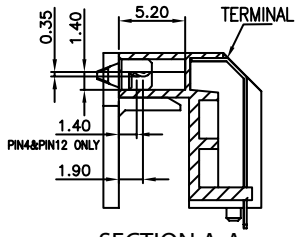


SECTION A-A

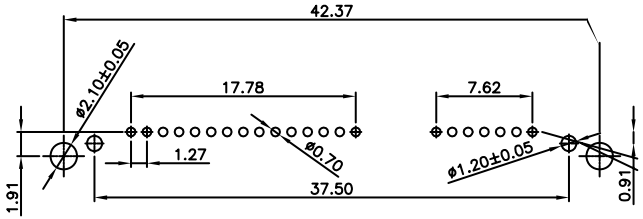


RECOMMENDED PCB LAYOUT

PCB THICKNESS = 1.20 mm +/- 0.05

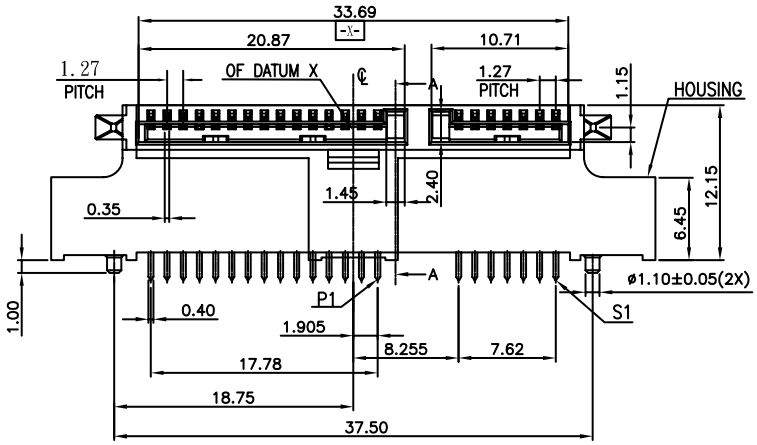


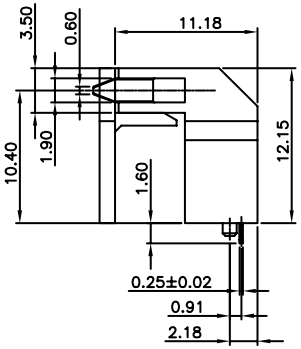


**ELETRICAL:**

CURRENT RATING: 1.5 A
VOLTAGE RATING: 500 VAC max.
CONTACT RESISTANCE: 30 mΩ max.
DIELECTRIC WITHSTANDING VOLTAGE: 500 VAC for 1 min (sea level)
INSULATION RESISTANCE: 1000 MΩ min.

**MATERIAL:**

INSULATOR: Thermoplastic - LCP Black; UL94 V-0
CONTACTS: Copper Alloy
CONTACT PLATING: Selelective Gold Plated on Contact Area Over 50 m" Min. NI Under Plated
150 µ" Min. Tin Plating on Solder Tails
BOARDLOCK:Copper Alloy
BOARDLOCK PLATING: 5 µ"Tin over 50 µ"Nickel

**ENVIRONMENTAL:**

OPERATING TEMPERATURE : -40°C to 85°C

**HOW TO ORDER:**

**W 3 0 0 - 2 2 1 8 - 2 I X X - Z**

**SELECTIVE CONTACT PLATING:**
1 - 0.127 mm [5 m"] SELECTIVE GOLD PLATING
2 - 0.254 mm [10 m"] SELECTIVE GOLD PLATING
3 - 0.381 mm [15 m"] SELECTIVE GOLD PLATING
4 - 0.508 mm [20 m"] SELECTIVE GOLD PLATING
5 - 0.762 mm [30 m"] SELECTIVE GOLD PLATING

**PACKAGING:**
0 - Tube
1 - Tray

**RoHS COMPLIANT**

| Rev | | Drawn | Checked | Approved | Date |
|---|---|---|---|---|---|
| 0 | Issued | B.S. | S.M. | S.M. | 10/28/09 |

SCALE:N/A

TOL. DEC. .X +/- 0.30 .XX +/- 0.25 .XXX +/- 0.13 ANGLE +/-3° UNIT: mm

***SMP TECHNOLOGY, INC.***

SATA, 22 Position, Docking Receptacle, Right Angle, 12.15 mm Height,

Thru Hole Mount, Reverse Orientation

P/N: W300-2218-2IXX-Z