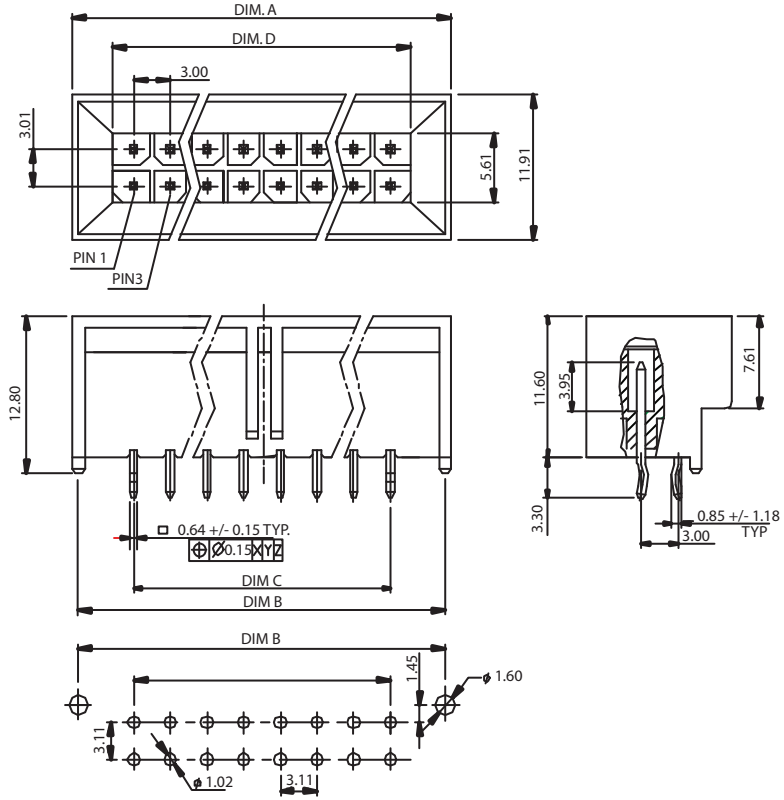

DIMENSION(mm)

CONTACTS	A	B	C	D
4	13.0	12.00	3.00	6.40
6	16.0	15.00	6.00	9.40
8	19.0	18.00	9.00	12.40
10	22.0	21.00	12.00	15.40
12	25.0	24.00	15.00	18.40
14	28.0	27.00	18.00	21.40
16	31.0	30.00	21.00	24.40
18	34.0	33.00	24.00	27.40
20	37.0	36.00	27.00	30.40
22	40.0	39.00	30.00	33.40
24	43.0	42.00	33.00	36.40

HOW TO ORDER:

W 0 7 1 - X X 0 2 - 2 X X - Z

SERIES:

TYPE NUMBER:

NUMBER OF CONTACTS:
04 Thru 24

ORIENTATION
2 - VERTICAL

MOUNTING OPTION:
1 - W/ PEG
2 - W/OUT PEG

KINKED TAIL OPTION:
0 - NONE
1 - ALL PINS KINKED (4 & 6 Position)
FIRST & LAST PAIR KINKED
ALL OTHER SIZES

PLATING :
1 - FULL TIN
2 - FULL Au FLASH

RoHS COMPLIANT

ELECTRICAL:
VOLTAGE RATING: AC/DC, 250V
CURRENT: 5 Amps
CONTACT RESISTANCE: 10 milliohm Max.
INSULATOR RESISTANCE: 1000M MegohmMin.
DIELECTRIC WITHSTANDING VOLTAGE: 1500VAC FOR 1 MIN.
OPERATING TEMPERATURE: -40° C TO +105° C

MATERIAL:
INSULATOR: PA6T (30 % Glass Filled) UL 94V-0 ; Black
CONTACT: Copper Alloy

MECHANICAL:
CONTACT RETENTION: 0.91Kgf MIN.

Rev		Drawn	Checked	Approved	Date
0	Issued	A.M.	S.M.	S.M.	06/15/05

SMP TECHNOLOGY, INC.

Power Connector; Header Assembly; 3.00 mm Pitch; Blind Mate; Vertical

TOL. DEC. .X +/- 0.35 .XX +/- 0.25 .XXX +/- ANGLE +/- UNIT: mm / in

SERIES: W 0 7 1 - X X 0 2 - 2 X X - Z