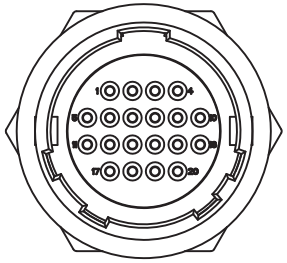

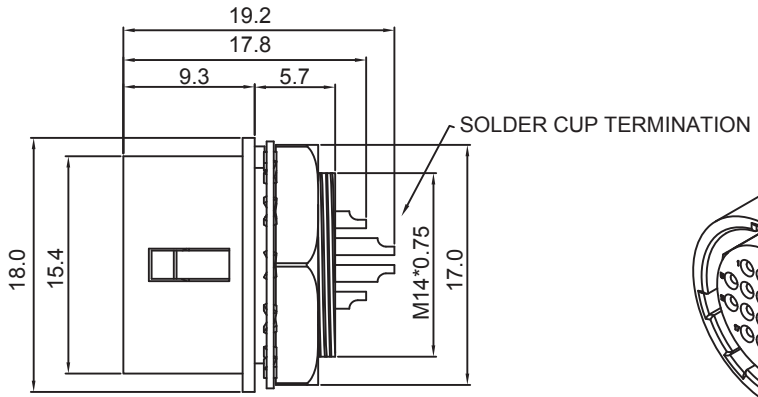

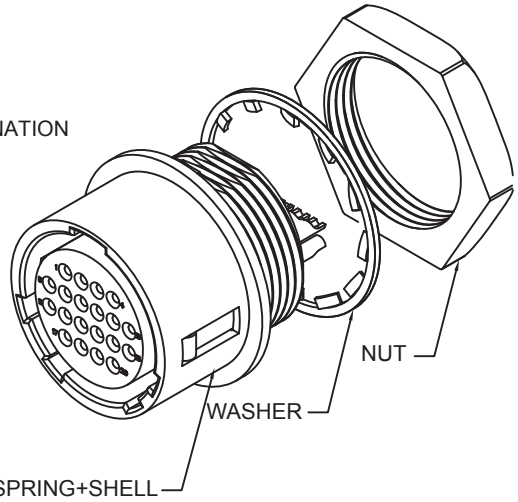

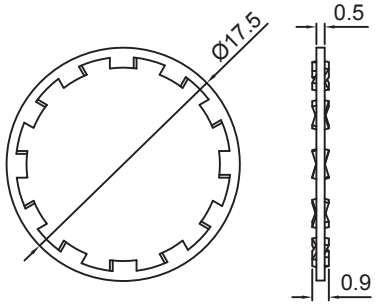

WASHER
P/N: HW-W-17.5-17.0-0.9

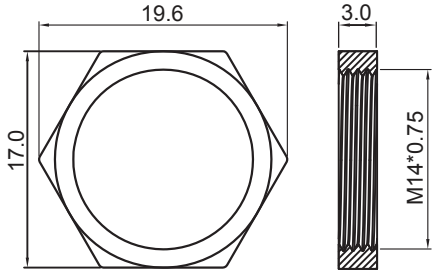

NUT
P/N: HW-N-M14*0.75-17.0

MATERIAL:
HOUSING: Thermoplastic PBT (UL94V-0) Black
CONTACT: Copper Alloy, Au Flash Plated
SHELL: Nickel Plated Zinc Alloy
SPRING: Stainless Steel
WASHER: Nickel Plated Phosphor Bronze
NUT: Nickel Plated Copper Alloy

HOW TO ORDER:

P R 3 2 - 2 0 0 1 - 0 0 0 0 - Z

- **P R** — R - Recepacle
- **3** — **SERIES:** 3 - Size 13
- **2** — 2 - Receptacle (Panel Mount)
- **2 0 0** — **# OF POSITIONS:** 20 - 20 Positions
- **1** — **TERMINATION:** 1 - Solder Cup
- **Z** — **RoHS COMPLIANT**

Rev		Drawn	Checked	Approved	Date
0	Issued	B.S.	S.M.	S.M.	08/01/19

SMP TECHNOLOGY, INC.

Circular Quick Lock Connector (Push Pull Type), Size 13, Receptacle,

Panel Mount, Solder Cup Termination

TOL. DEC. .X +/- 0.20 .XX +/- 0.10 .XXX +/- 0.05 ANGLE +/- 1° UNIT: mm

P/N: PR32-2001-0000-Z