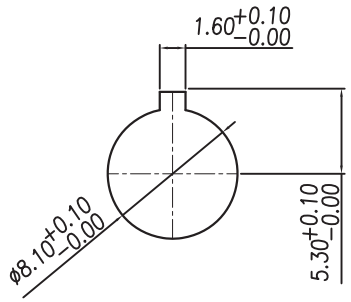

RECOMMENDED MOUNTING HOLE
(Panel Thickness 0.7~2)

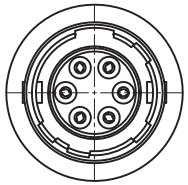

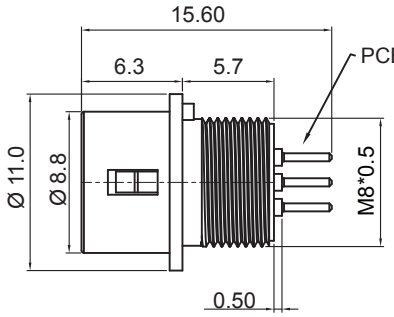

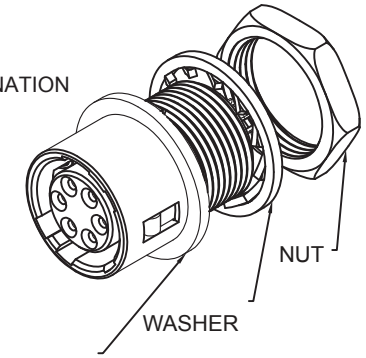

HOUSING+CONTACT+SPRING+SHELL

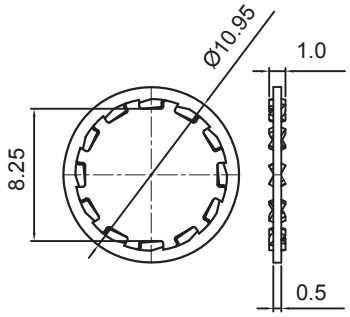

WASHER
P/N: HW-W-8.25-10.95-1.0

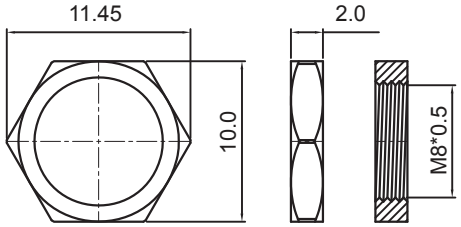

NUT
P/N: HW-NM8*0.5-11.45

CONTACT ARRANGMENT (FRONT VIEW)

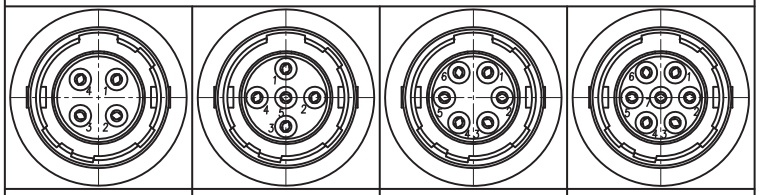

PR11-0402-0000-Z	PR11-0502-0000-Z	PR11-0602-0000-Z	PR11-0702-0000-Z

MATERIAL:
HOUSING: Thermoplastic PBT (UL94V-0) Black
CONTACT: Copper Alloy, Au Flash Plated
SHELL: Nickel Plated Zinc Alloy
SPRING: Stainless Steel
WASHER: Nickel Plated Phosphor Bronze
NUT: Nickel Plated Copper Alloy

HOW TO ORDER:

P R 1 1 - X X 0 2 - 0 0 0 0 - Z

R - Receptacle

SERIES:
1 - Size 7

1 - Receptacle (PCB Mount)

 # OF POSITIONS:
04 - 4 Positions
05 - 5 Positions
06 - 6 Positions
07 - 7 Positions

TERMINATION:
2 - PCB Mount

RoHS COMPLIANT

Rev		Drawn	Checked	Approved	Date
0	Issued	B.S.	S.M.	S.M.	07/25/19

SMP TECHNOLOGY, INC.

Circular Quick Lock Connector (Push Pull Type), Size 7, Receptacle,

PCB Mount Termination

TOL. DEC. .X +/- 0.20 .XX +/- 0.10 .XXX +/- 0.05 ANGLE +/- 1° UNIT: mm

P/N: PR11-XX02-0000-Z