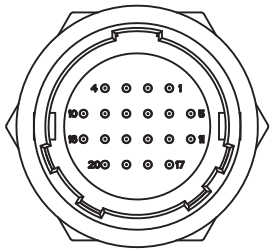

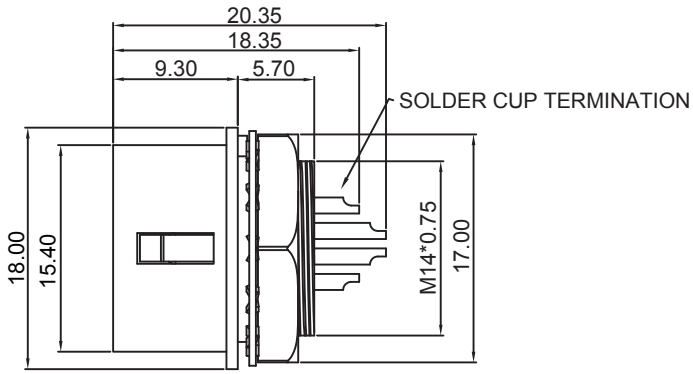

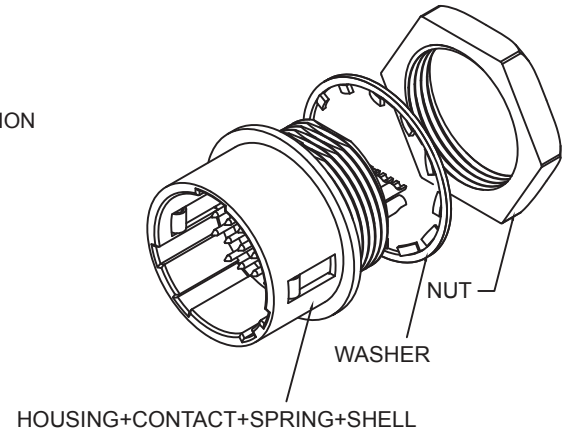

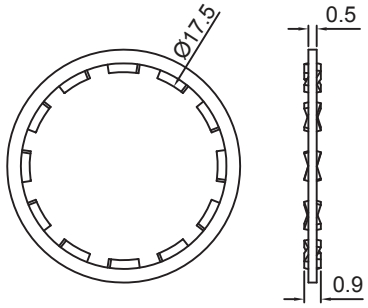

WASHER
P/N: HW-W-11.3-17.5-0.9

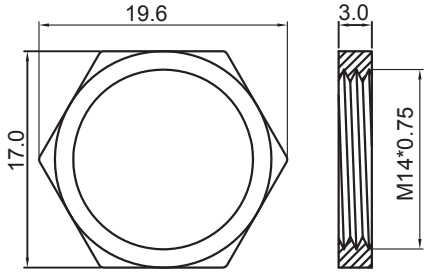

NUT
P/N: HW-N-M14*0.75-17.0

MATERIAL:
HOUSING: Thermoplastic PBT (UL94V-0) Black
CONTACT: Copper Alloy, Au Flash Plated
SHELL: Nickel Plated Zinc Alloy
SPRING: Stainless Steel
WASHER: Nickel Plated Phosphor Bronze
NUT: Nickel Plated Copper Alloy

HOW TO ORDER:

P P 3 6 - 2 0 0 1 - 0 0 0 0 - Z

- P - Plug
- **SERIES:** 3 - Size 13
- 6 - Plug Panel Mount (Solder Cup)
- **# OF POSITIONS:** 20 - 20 Positions
- **TERMINATION:** 1 - Solder Cup
- **RoHS COMPLIANT**

Rev		Drawn	Checked	Approved	Date
0	Issued	B.S.	S.M.	S.M.	07/25/19

SMP TECHNOLOGY, INC.

Circular Quick Lock Connector (Push Pull Type), Size 13, Plug, Panel Mount, Solder Cup Termination

TOL. DEC. .X +/- 0.20 .XX +/- 0.10 .XXX +/- 0.05 ANGLE +/- 1° UNIT: mm

P/N: PP36-2001-0000-Z