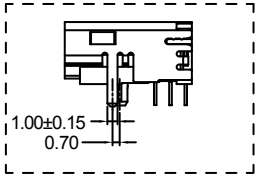

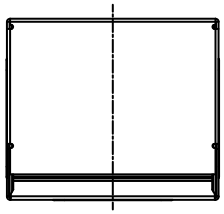

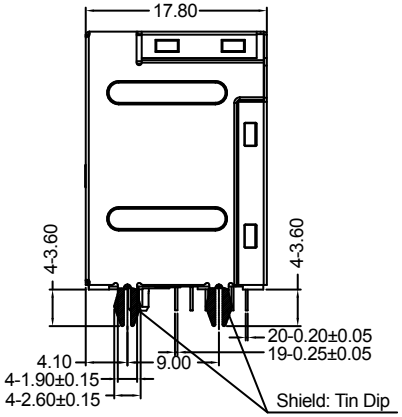

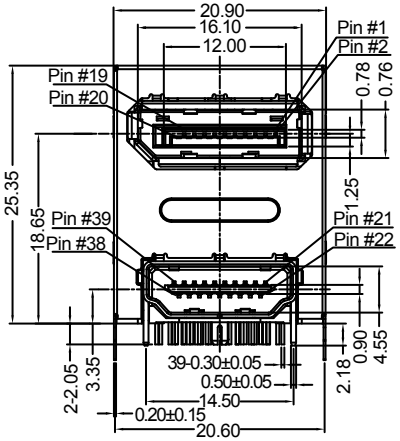

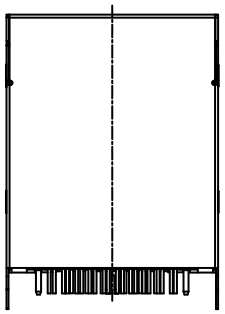

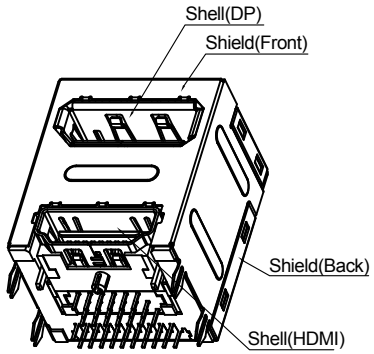

ISOMETRIC VIEW

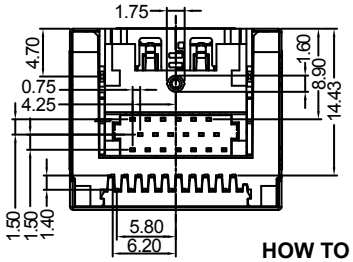

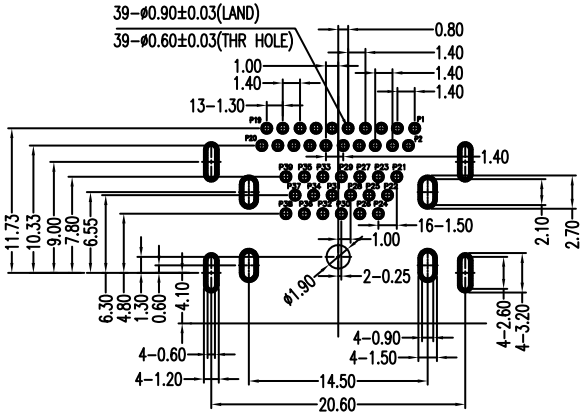

RECOMMENDED PCB LAYOUT

ELECTRICAL:

VOLTAGE: 40 VAC (RMS) Max.
CURRENT RATING: 0.5 Amp Per Contact
CONTACT RESISTANCE: 30 milliohms Max.
INSULATOR RESISTANCE: 100 Megohms Min.
DIELECTRIC WITHSTANDING VOLTAGE: 500 DC (RMS)
OPERATING VOLTAGE: 40 VAC Max.

MATERIAL:

INSULATOR: Black LCP (UL94V-0)
CONTACT: Copper Alloy
SHIELD: Stainless Steel
TERMINAL: Select Au Plating in Contact Area; 100u" Tin Solder Tail;
All Over 30u" min Nickel Subplate

HOW TO ORDER:

D D 2 0 - X 0 0 X - 0 0 X - Z

BOTTOM CONNECTOR:
2 - HDMI 19 Position

CENTER MOUNTING PEG OPTION:
0 - Without Peg
1 - With Peg

INSULATOR OPTIONS:
0 - LCP
1 - Upper Insulator PBT
Lower Insulator LCP

SELECTIVE CONTACT PLATING:
0 - Au Flash / Tin PC Tail
1 - 15u" Au / Tin PC Tail
2 - 30u" Au / Tin PC Tail

RoHS COMPLIANT

Rev		Drawn	Checked	Approved	Date
0	Issued	B.S.	S.M.	S.M.	07/06/17

SMP TECHNOLOGY, INC.

Stacked DisplayPort Over HDMI Connector

TOL. DEC. X.XX +/- 0.25 X.XXX +/- 0.13 ANGLE +/- 2° UNIT: mm

P/N: DD20-X00X-00X-Z