MINI PCI EXPRESS FULL CARD SUPPORT SOLUTIONS

OPTION I

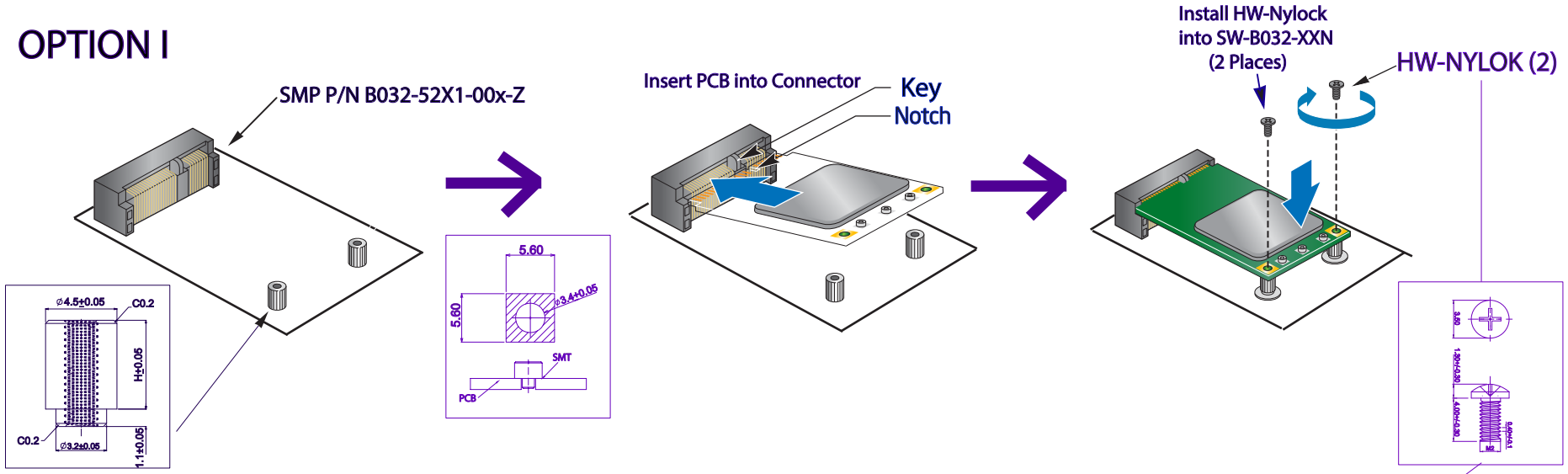

HW-B032-XXN (2) Note: This part is available in various heights
to accomodate various connector heights
See Drawing HW-B032-XX-N

OPTION II

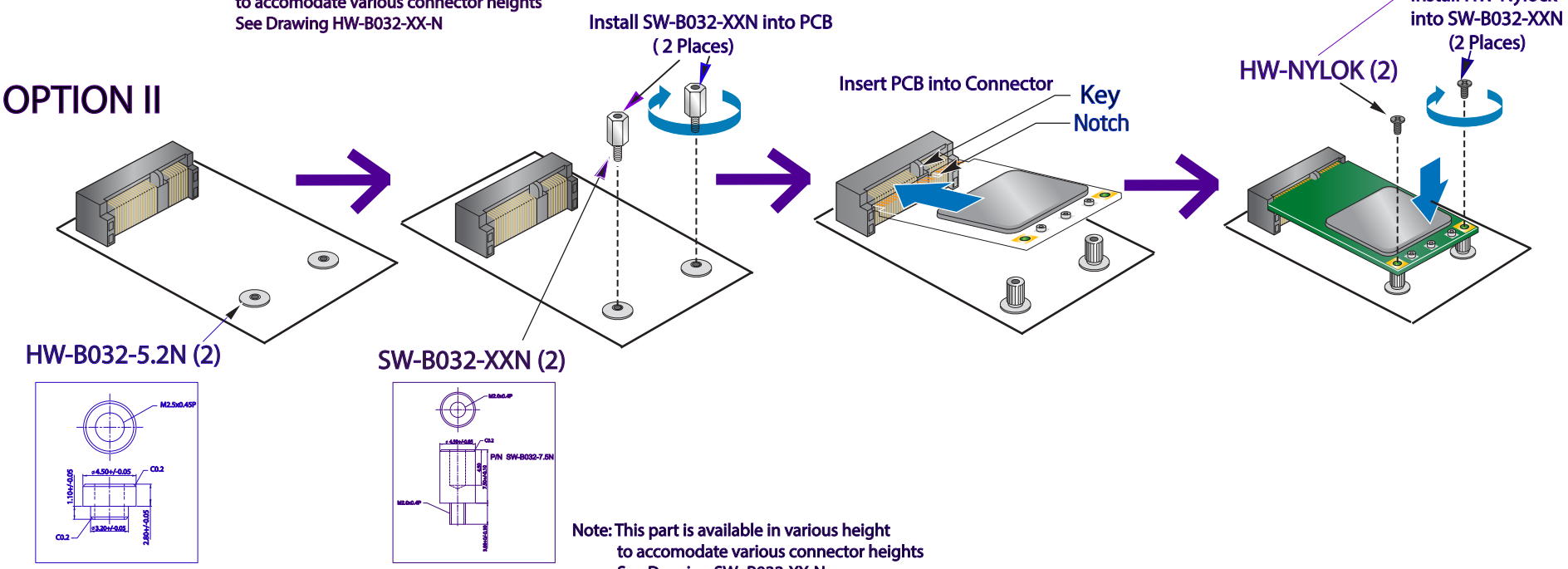

Note: This part is available in various height
to accomodate various connector heights
See Drawing SW- B032-XX-N